TECHNICAL DATA SHEET

DucoBox Energy Comfort Plus D250

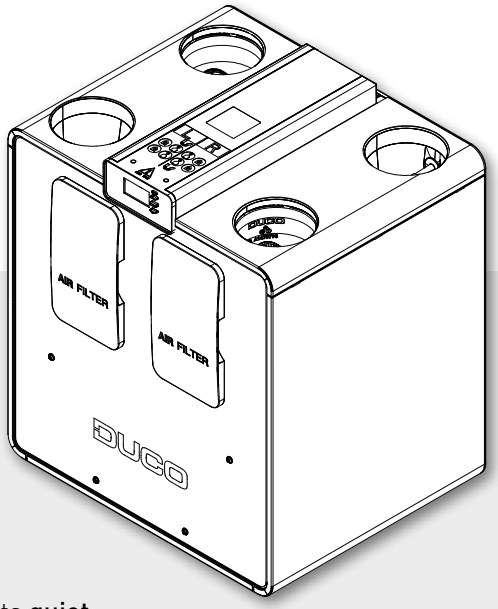

The DucoBox Energy Comfort Plus D250 is the **most compact Mechanical Ventilation with Heat Recovery (MVHR) unit** within the gamut of The Energy Family.

The 100 % software-based L/R exchange, smart demand control based on CO_2 and humidity, and automatic calibration ensure maximum energy efficiency.

The 2-zone control reduces noise levels by at least 30 %. Thanks to its **quiet operation, automatic adjustment, and copy function**, this unit combines maximum ease of installation with excellent living comfort. The metal housing of this Plus variant also guarantees **extra acoustic damping** —ideal for apartments and compact homes where comfort is a priority.

Versions

Type	Supply and extraction capacity at 150 Pa	Supply and extraction capacity at 200Pa	2-zone system	Frost protection	Item number
DucoBox Energy Comfort Plus D250	250 m³/h	221 m³/h	Yes (external - optional)	Imbalance or external heater (optional)	0000-7077

Physical properties

Width x Height x Depth (mm)	Overall dimensions: 565 x669 x 491 Box dimensions: 565 x 605 x 456
Casing	Coated sheet steel
Colours	White + green
Connections	Inner diameter: ∅ 125 mm
Condensate drain	∅ 32 mm (1 ¼ in) (2x)
Heat exchanger	Plastic
Material of inside section	EPP / PP / ABS
Weight	29 kg
Power cable length	2 m (from top of unit)
Mounting	Wall mounting (standard) Floor mounting as an option usinga support frame

Electrical characteristics

Maximum power	100 W
Power supply	230V, 50Hz via 3-core power cable with earthed plug
Type of motor	DC
IP class	IP40
Energy conversion efficiency	89.5% (EN 13141-7)

Miscellaneous characteristics

Energy class	With 2 sensors (control factor 0,65): A+ Other: A
Filters	**Supply air**: Standard: ISO 16890 Coarse 65 % (=G4) Optional: ISO 16890 ePM1 55 % (=F7) **Exhaust air**: Standard: ISO 16890 Coarse 65 % (=G4)
Fans	EC fan with forward-curved blades
Automatic calibration	Yes (Constant Pressure & Constant Flow)
Installer App	Via Duco Connectivity Board (if permanently mounted) Via Duco Installation Kit (mobile application)
Passive cooling	Automatic passive cooling control via the "NightBoost" feature
Operation	Integrated Display Use via remote controls and Humidity Sensors Optional via smartphone/tablet (provided Duco Connectivity Board in device)
Sensors	**Integrated**: pressure, temperature, onboard, switch sensor **External**: CO_2 (via optional Room sensor), Humidity (via optional Room sensor or measurement in ETA duct), external Switch Sensor (voltage-free input) (optional)
Communication	**Standard** Duco RF, Duco Wired, Switch Sensor **Expandable with Duco Connectivity Board**: Modbus TCP (local), REST API (local or via cloud) - both via Ethernet or Wi-Fi

Pressure/flow characteristics

Flow rate (m^3/h)	**Pressure** (Pa)	**Absorbed power** * (W)
223	200	91
200	200	80
150	200	59
237	175	95
200	175	74
150	175	54
250	150	100
200	150	70
150	150	49
200	100	58
150	100	39
100	100	28

* The values mentioned are an estimate and cannot be used as substantiation.

DucoBox Energy Comfort Plus D250

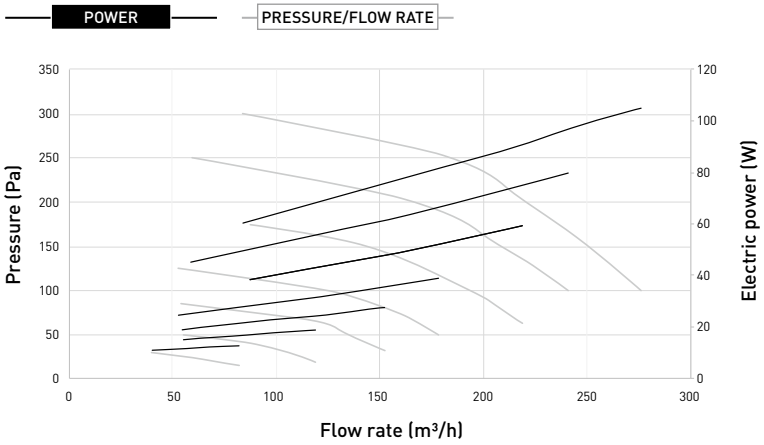

Acoustic properties

Emission from casing measured in accordance with ISO 3741:2010
Supply and extraction noise level according to ISO 5135:1997 (with duct correction)

1. Emission from casing

Flow rate m³/h	Pressure Pa	LwA emission from casing dB(A)	Octave band frequencies Hz							
			63	125	250	500	1000	2000	4000	8000
250	150	50,0	42,4	48,3	52,6	47,0	43,7	41,6	37,8	28,1
225	150	49,0	41,4	48,1	51,8	46,0	42,7	40,4	36,3	26,8
200	150	47,8	41,3	48,2	50,6	44,9	41,8	39,1	34,8	25,9
200	125	46,9	40,2	46,9	49,7	43,9	40,9	38,1	33,5	25,4
175	125	45,8	40,9	46,3	48,4	42,7	40,0	36,9	32,2	25,0
150	125	44,7	42,0	45,6	47,7	41,5	39,0	34,6	30,5	24,6
150	100	43,5	40,2	43,8	46,1	41,5	37,8	32,9	28,7	24,4
125	100	42,4	41,9	43,8	45,9	38,9	36,6	31,3	27,0	24,2
100	100	40,9	43,0	42,4	44,1	37,4	35,4	29,8	25,3	24,2
100	75	39,8	41,1	40,5	43,8	35,8	33,6	27,5	23,3	24,1
75	75	38,2	38,1	38,3	42,1	34,6	32,1	26,1	22,2	24,1
175	50	42,1	51,6	41,3	45,1	38,7	36,4	33,4	26,7	24,3
75	50	35,6	57,2	36,6	37,3	32,7	29,5	23,0	20,9	24,1
50	50	32,9	35,1	32,7	34,5	30,6	27,0	21,8	20,7	24,1
50	25	33,1	33,5	32,2	31,2	35,1	23,0	19,6	20,5	24,1
25	25	31,0	31,1	31,8	33,3	27,5	21,4	19,3	20,5	24,1

2. Supply noise

Flow rate m³/h	Pressure Pa	LwA supply dB(A)	Octave band frequencies Hz							
			63	125	250	500	1000	2000	4000	8000
250	150	69,0	76,1	74,0	74,1	65,8	61,5	57,6	48,6	42,3
225	150	67,6	76,8	74,0	72,6	64,2	60,3	56,2	46,8	39,9
200	150	66,6	77,5	74,0	71,8	63,0	59,1	54,8	45,1	37,4
200	125	65,9	76,5	73,3	71,8	61,6	58,1	53,6	43,8	36,0
175	125	64,2	76,7	72,7	69,3	60,1	56,8	51,4	41,7	33,1
150	125	63,2	79,1	71,5	68,4	58,8	55,6	49,0	39,8	30,8
150	100	61,4	75,7	69,8	66,5	57,2	54,3	46,8	37,6	28,6
125	100	60,5	76,0	69,4	66,0	55,4	53,0	44,7	35,2	26,7
100	100	59,3	77,4	68,7	64,0	53,5	52,0	43,5	33,2	25,8
100	75	58,5	80,2	67,1	62,2	51,4	49,9	40,7	29,2	24,6
75	75	57,0	80,0	64,2	59,0	50,0	48,4	39,7	26,9	24,3
175	50	60,5	71,9	68,2	66,0	56,2	53,8	46,5	36,8	28,8
75	50	52,2	72,2	61,7	55,7	47,3	44,8	34,9	22,9	24,0
50	50	50,0	70,2	58,5	53,1	45,9	42,4	32,8	21,7	24,0
50	25	44,8	65,6	53,3	47,0	42,2	36,3	24,0	20,6	24,0
25	25	42,2	61,7	48,6	45,8	38,6	34,9	22,7	20,5	24,0

3. Extraction noise

Flow rate m³/h	Pressure Pa	LwA extraction dB(A)	Octave band frequencies Hz							
			63	125	250	500	1000	2000	4000	8000
250	150	54,9	68,8	62,3	58,7	51,6	45,9	42,0	33,1	25,7
225	150	53,6	67,7	61,3	57,9	49,7	44,2	40,0	30,7	24,8
200	150	52,2	66,1	61,0	56,1	47,7	42,6	37,9	28,8	24,4
200	125	51,4	65,5	60,4	54,5	47,1	41,9	37,2	27,9	24,3
175	125	50,3	65,1	59,6	53,2	45,0	40,3	36,3	26,2	24,2
150	125	49,0	65,6	57,8	52,2	43,4	39,5	32,7	25,0	24,2
150	100	47,5	64,3	56,2	50,5	42,2	38,9	31,1	23,9	24,1
125	100	46,9	65,3	56,0	49,6	40,4	36,1	29,6	23,4	24,4
100	100	45,9	66,0	55,5	48,4	39,4	34,3	27,9	22,5	24,1
100	75	44,7	64,6	53,3	46,2	37,3	32,3	25,7	21,5	24,1
75	75	42,4	62,7	50,4	43,8	36,1	30,4	24,3	21,1	24,1
175	50	48,0	61,5	58,0	50,5	42,8	37,8	33,9	23,3	24,1
75	50	39,2	60,1	47,8	40,5	33,5	28,5	22,1	20,7	24,1
50	50	36,7	58,7	44,1	37,0	30,6	25,5	20,9	20,6	24,1
50	25	34,2	57,7	41,6	32,4	28,2	22,2	19,3	20,5	24,1
25	25	31,6	52,7	38,8	31,5	25,7	20,4	19,1	20,5	24,1

Dimensions of DucoBox Energy Comfort Plus D250

Front view

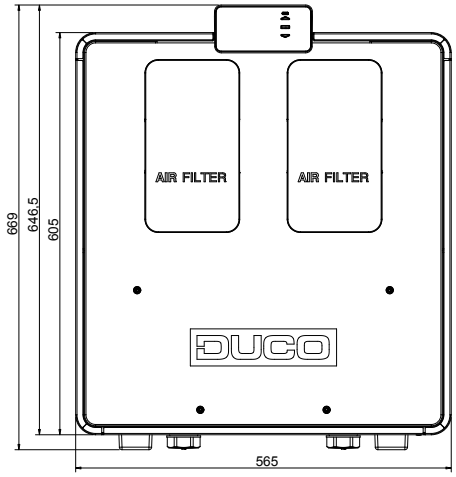

Rear view

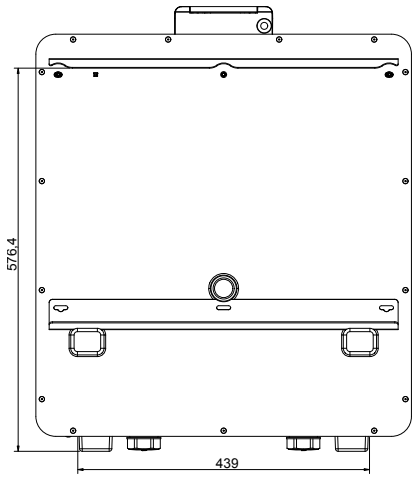

Top view

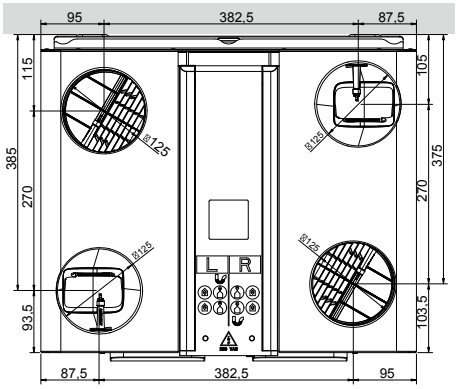

Bottom view

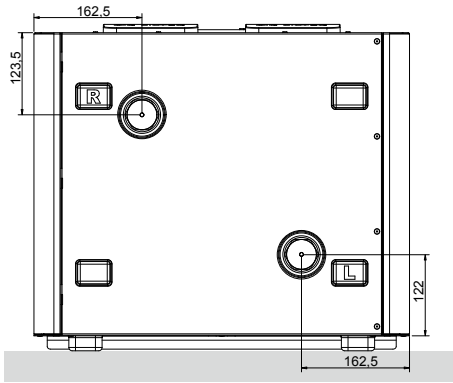

Side view

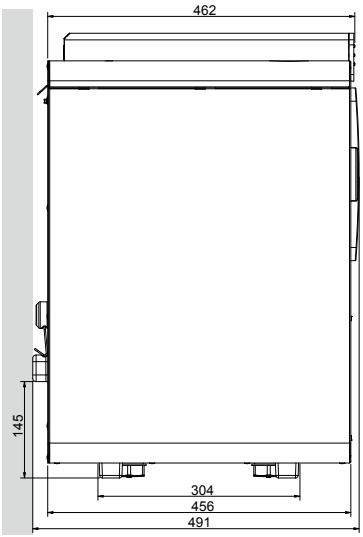

Optional accessories

Product	Item number
Siphon Flat (Energy)	0000-4376
Duco Connectivity Board 2.0	0000-4945
Humidity Box Sensor Energy Comfort	0000-4723
Mounting chair standing (Energy Comfort (Plus) D250)	0000-7134
Filter set 2 x Coarse 65 % (Energy Comfort (Plus) D250)	0000-7132
Filter set Coarse 65 % / ePM1 55 % (Energy Comfort (Plus) D250)	0000-7133
Set Coax cable 8 m	0000-4418
Pre-Heater DucoBox Energy Comfort (Plus) 1150 W	0000-5011
External multi-zone valves	Miscellaneous
Remote controls and room sensors	Miscellaneous
(Insulated) connection piece with joint	Miscellaneous